ADVANCED FEM ANALYSIS OF SUPPORT BEAM OF A MODERN TRAM

Prof. A. Bracciali, Dr. F. Piccioli, T. De Cicco

Dipartimento di Meccanica e Tecnologie Industriali
Università di Firenze, via Santa Marta 3, 50139 Firenze

andrea.bracciali@unifi.it, fabio.piccioli@unifi.it, teo.decicco@gmail.com

KEYWORDS: Tram, Low floor, FEM analysis

ABSTRACT

Aluminium carbody components are more sensible to fatigue than the corresponding steel components. Failures of such components can be very expensive, also in terms of fleet unavailability, and they can have safety implications. FEM analysis can be an useful tool in both designing carbody components and investigating their failures in order to find the right countermeasures. In this paper a structural finite element model, built in order to investigate the failure in the support of a "suspended" carbody of a modern low floor tram, is presented.. Due to the characteristics of the vehicle and the peculiar geometry of the component, a complex approach was followed in order to find the right loads and in order to achieve the desired precision in the stress field.

INTRODUCTION

The fleet of trams of a big city operator is composed in a non negligible percentage by vehicles made of seven articulated carbodies over four bogies. The reason for this choice can be found in the requirement of a low floor over the entire length of the vehicle. The vehicle (Figure 1) is made of two driving trailer short vehicles (type 1), three "suspended" carbodies (type 2) and two motor short vehicles (type 3).

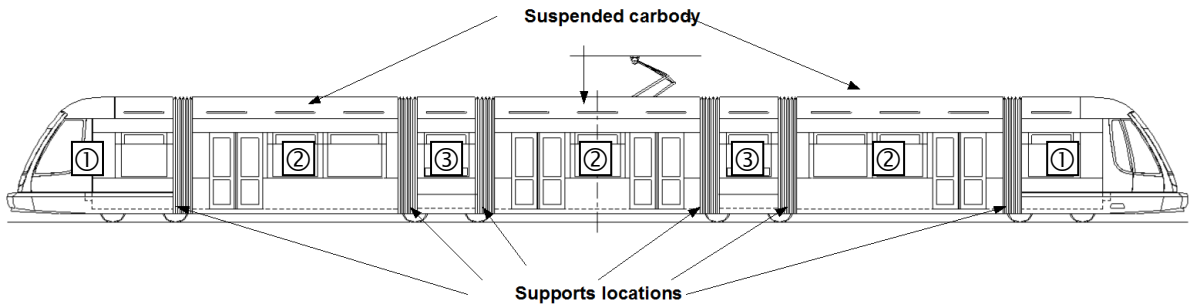

Figure 1. Tram layout. The vehicle includes two driving trailers ①, three suspended carbodies ② and two motor short vehicles ③.

Such an architecture requires that suspended carbodies include connection elements (with spherical bearings for proper orientation of the different modules) resting on support beams welded or bolted to the headstock of short vehicles carbody (Figure 3). The function of the support beam and spherical joints is to carry the vertical load due to the weight and the transversal and longitudinal loads that arise during the travel of the tram.

The carbodies of the tram, designed more than 10 years ago, are made of aluminium alloy in order to reduce weight and to simplify the construction process using extruded profiles. This practice was rather usual at that time, as only in more recent years the manufacturers decided to go back to high-strength steel for carbody frame manufacturing. The support beam of the spherical bearing, that was made of steel and bolted to the headstock for a previous series of similar vehicles, is in this case made of aluminium alloy and it is welded to the carbody in the headstock area (Figure 2).

FAILURE ANALYSIS

The first appearance of the problem considered here consisted of a support collapse during revenue service of the tram resulting in the split of the tram in two parts; fortunately this happened at very low speed at one terminus without consequences on passengers (Figure 2).

Figure 2. Aluminium support beam, welded to the headstock and supporting the suspended carbodies. The (maintenance free) spherical joint in visible together with the rubber dust cap seal (left). A photograph of the first broken support beam (right)

The analysis of the fracture surfaces led to the conclusion that the failure was a classical fatigue fracture problem, with very limited plastic deformation of the parts, limited beach marks on the surfaces and rough surfaces originate by sudden fracture of the component.

An NDT campaign immediately started to highlight possible failures of the support beams of the whole fleet, made of 50 vehicles (for a total of 300 support beams). Unfortunately several cracks were detected in the position indicated in Figure 3; the detection of a crack in any of the six supports of a tram made the vehicle immediately unavailable for the service due of the safety implications of such damage.

Very likely the origin of the failures is the stress concentration given by the *sharp edge* (right angle corner) already described. As the support is welded to the carbody, a substitution of the part was not possible without undergoing heavy disassembly operations (carbody lifting), and anyway it was not possible in the ordinary maintenance workshop. This led rapidly to the unavailability of a large number of vehicles and a possible solution (repair or renewal) was investigated.

Figure 3. Another broken support beam (left) and location of cracks during NDT evaluation with penetrating liquids (right)

Initially the proposed repair solution was the elimination of the very sharp edge in the support beam by means of spherical milling operation, thus creating a spherical fillet with the aim of reducing the stress concentration factor in the area and also of eliminating any existing or incipient crack from the in service support beams. The authors were approached in order to evaluate the effectiveness of this repair solution; a FEM analysis of the current and of the proposed geometry were therefore performed and the results are discussed in this paper.

ANALYSIS OF THE LOADS ON THE SUPPORT BEAM

The support beam is subjected to different loads depending on their position in the vehicle and on the behaviour of the tram. In principle it is possible to identify (Figure 4):

- *vertical loads* due to weight of the carbody and the payload, vehicle dynamics, load changes during acceleration / deceleration;
- *lateral loads* due to centrifugal force in curves and to vehicle dynamics;
- *longitudinal loads* due to braking or traction, to vehicle dynamics and to exceptional crash loads.

Some of these loads act as with a static or quasi-static behaviour, but the majority are loads that produce fatigue damage to the support; some indication on how to determine/combine loads are given in [1], but being the tram a “non standard” vehicle some additional considerations should be made.

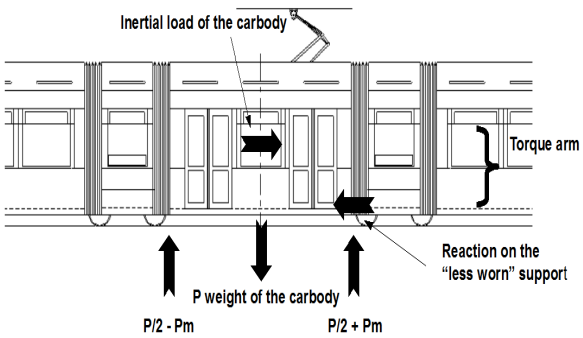

Figure 4. Vertical and longitudinal loads on the support beams due to weight (tare + payload) and braking/acceleration for the central suspended carbody.

Longitudinal crash loads, vertical dynamics loads and lateral dynamics loads are well defined in [1]; longitudinal loads deriving from braking and traction, that act in a very different way compared to a conventional vehicles due to the presence of the suspended carbody, are instead not considered and must be evaluated in some other way.
When a conventional vehicle brakes or accelerates, the torque due to the inertia force applied at a vertical level (centre of mass) different from wheel/rail contact level is balanced by the a variation of the vertical load on the wheels. In the case of a suspended carbody, such load difference is carried by the spherical bearings and by the relative supports. It should also be pointed out that conventional vehicles are in general all braked, and so longitudinal loads are only due to the difference in braking effort of adjacent portions of the train; a suspended carbody without wheels is instead fully braked by adjacent vehicles with wheels, and as consequence the coupling devices (spherical bearing supports in this case) take all the braking effort.

An even worse condition is related to possible minor differences in the braking behaviour of the several portions of the tram. Let’s suppose that, during a service braking, the front part of the tram (i.e. the first two “bogies”) brakes *slightly less* than the rear part of the tram: the longitudinal load on the rear support beam of the central suspended carbody will be that due to the “residual” inertia force of the front part of the tram *plus* the whole inertia force of the carbody until a dynamic balance is found. This is true regardless the fact that the spherical joints are mounted with play or with interference, and similar

conditions apply during acceleration if it is supposed that tractive effort is only slightly different between the front and the rear part of the vehicle.

About static loads, after an analysis of the loads described in [1] and of the peculiarities of the tram, the following load cases were individuated for exceptional static loads (Table 1):

S.1 maximum vertical static load (exceptional occupation of the vehicle);

S.2 maximum vertical static load (in service conditions) and longitudinal compression of 200 kN (crash load for light vehicles from [1]);

S.3 maximum vertical static load (in service conditions) and longitudinal tension of 40 kN (suggested by the manufacturer in case of a defective tram being dragged by another tram).

Table 1. Static load cases

Load case	Vertical [N]	Longitudinal [N]
S.1	-69278	0
S.2	-57732	-200000
S.3	-57732	+40000

In this case the validation of the component will require to get a reasonable high safety level against possible yield in any are of the support beam.

About fatigue behaviour, the evaluation of the correct stress field and the resulting estimation of life greatly depends on the history of loads. A specific measuring campaign was performed by the vehicle owner, instrumenting a spherical bearing support with strain gauges and recording the stresses during a long campaign taken over the entire tram network. Data were analysed with rainflow methods in order to evaluate stress ranges occurring during the different vehicles running conditions. The results showed that the longitudinal efforts plays a big role on the stress level of the support beam.

It was therefore decided to combine in the worst way this type of load with the others, thus considering a tram accelerating or braking when running on a curve with poor track quality. The resulting fatigue loads cases combination is as follows (Table 2):

F.1 dynamic vertical load due to wheel track interaction with a mean load due to weight in service conditions (from [1]);

F.2 vertical load variation, again with mean load due to weight, due to braking / traction;

F.3 transversal load due to non compensated lateral acceleration and dynamic effects (from [1]);

F.4 longitudinal load due to traction / braking.

Table 2. Fatigue load cases

Load case	Limit	Vertical [N]	Lateral [N]	Longitudinal [N]
F.1	Upper	-57732	7208	18221
	Lower	-38780	-7208	-12355
F.2	Upper	-57732	7208	-12355
	Lower	-38780	-7208	18221
F.3	Upper	-57732	-7208	18221
	Lower	-38780	7208	-12355
F.4	Upper	-57732	-7208	-12355
	Lower	-38780	7208	18221

It should be noted that not all the fatigue loads mentioned above act at the same time and with the same frequency: for example, the vertical dynamic load is always present when the vehicle moves and acts at a relatively high frequency, while forces due to curving and braking / traction are present only in the relevant situations and change at much lower frequency.

CONSIDERATIONS ON MATERIAL BEHAVIOUR

It is well known that aluminium alloy has a fatigue behaviour quite different from steel. First, it has not a well defined fatigue limit as the life is anyway limited, for any level of stress. Second, there is a much higher decrease of the fatigue resistance in welded or thermally affected zones. For example, for a steel with a bulk material fatigue limit of 90 MPa, in the welded areas the fatigue limit decreases to 75 MPa, while for an aluminium alloy the same values are 70 MPa and 16 MPa respectively.

These considerations, and also the fact that long aluminium extruded section bars are easy to produce and assemble in factory but much less easy to repair after collisions, have determined a general trend in the tram industry to come back to carbody and carbody components made of steel.

In this paper the support beam will be considered as made of aluminium allow 6082T6 with a yield limit of 260 MPa; no welds are included except for the headstock main weld, which has very low stresses and that will not be further considered in this paper.

FEM MODELLING CONSIDERATIONS

Rolling stock manufacturers are used to model full carbodies with shell elements for evident reasons of calculation effort. A full 3D model would be impossible to implement and to solve, being moreover useless for most of the practical purposes. In this work a completely opposite approach was used, modelling *only* the spherical bearing, spherical bearing fitting and the support beam, for the following reasons:

1. the solution near the weld of the support to the carbody was of no interest in this case;
2. attaching the support to a carbody portion (rather than constraining it rigidly) does not result in a much more conservative solution, at least in term of stresses;
3. avoiding to model the carbody saves a lot of computational resources that were extensively used to refine the model in areas of particular interest (fillet, edges, contacts etc....).

It should be remembered, in fact, that cracks appear *locally* and that a precise definition of critical areas in fundamental. Full models of the carbody respond to the need of estimating *global* displacements (that are an integral function) and dynamic behaviour, but they fail in localizing *differential* quantities like stress concentrations.

Due to the nature of the problem, i.e. a classical fatigue failure in an area of high stress concentration, general requirements of the model are such that it should achieve:

- a good representation of support fillets or sharp edges in order to obtain a good estimation of stresses in the areas where fatigue failures are likely to be expected;
- a good representation of the load transfer between the carbody and the support in order to have a solution on the support itself that is not influenced by concentrated loads or constraints. This was of high importance in the area of the fillet shown in Figure 6, where unrealistic results can be achieved if the loads are applied directly on the support.

The calculation of the loads (and therefore of the stresses) acting on the support beam is not easy. There are in fact two possibilities:

- if the spherical joint is mounted in its housing with play, the configuration of the preload given by the weight of the suspended carbody and the different payload of the vehicles leads to different working conditions in terms of possible sliding and friction;
- if the spherical joint is instead mounted with interference, the preload on the support beam may affect the behaviour of the base material under dynamic stress.

While the first objective was achieved refining the mesh in the areas of interest and using an elastic-plastic model of the material, the correct load transfer between carbody and the support was achieved by properly modelling the spherical bearing and all the elements that form the coupling with the support beam (Figure 5). The following factors were therefore taken into account:

- bolted joint between the support beam and the spherical bearing fitting, considering bolt pre-stress and friction between surface;
- geometry of the two elements of the spherical bearing that are coupled with an average angle (when a longitudinal or a transversal load are applied a vertical component arises).

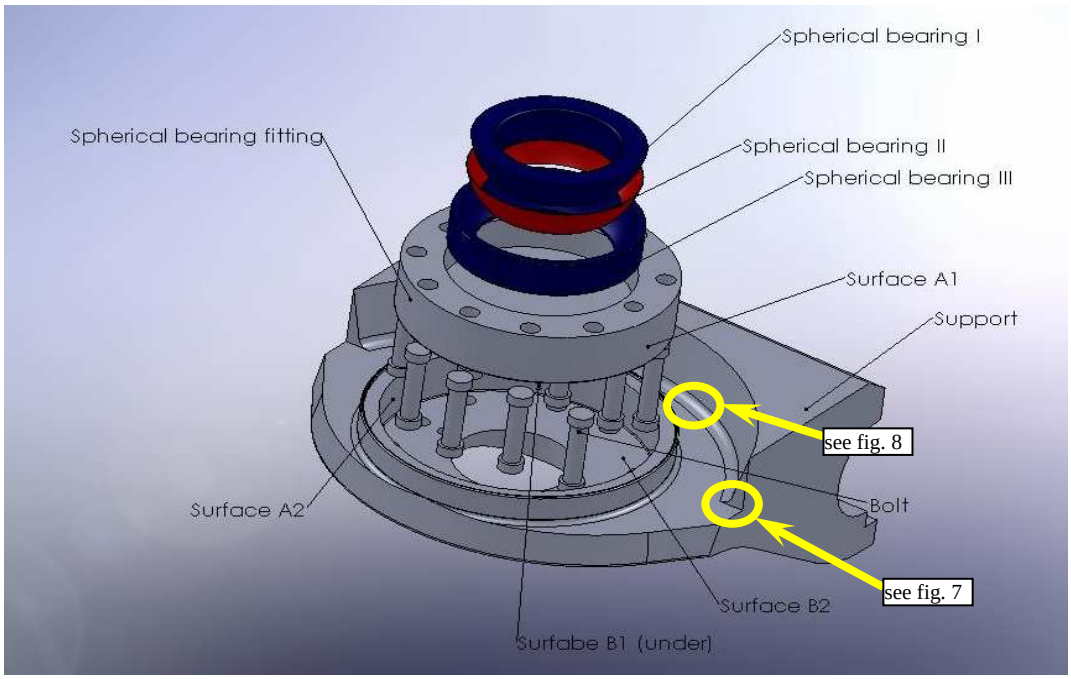

Figure 5 Elements of the geometry of the FEM model. Critical areas discussed in the following are indicated.

<u>Considerations on sharp edge modelling</u>

When considering the original configuration of the support, the area where cracks were discovered has a 90° edge between a vertical and a horizontal surface. In this case the theory of elasticity states that the stress concentration factor tends to reach an infinite value, while it is actually possible that local plastic conditions are reached and that the presence of a tiny, but finite, fillet limits anyway the stress value. It is well known that in a linear elastic FEM analysis, the maximum stress in a right angle edge increases continuously as the average size of the element is decreased.

In order to achieve a reasonable solution, the convergence of the values of stresses in the edge area was achieved by using small elements and elastic-plastic behaviour of the material. The material behaviour was considered as bilinear, i.e. linear elastic until the yield stress was reached (260 MPa) and linear plastic from the yield point to the ultimate tensile stress / max elongation point (UTS=310 MPa, ε=10%).

The stresses on a line 0.5 mm away from the corner were monitored as an indicator and also the maximum value on the corner edge was recorded (Table 3). Figure 6 shows the mesh in the edge and the convergence graph of the maximum stress. The optimal size of the elements on the sharp edge was investigated, in order to save time, using a simplified model without contacts and with only one load case, thus taking into account that the area of the corner is far away enough from any loads.

Table 3. Stress change with elements size in the sharp edge area (elasto-plastic behaviour)

Mesh size [mm]	Max Equivalent Stress (Von Mises) [MPa]	Change from previous step
2.00	150	/
1.00	219	+ 46 %
0.50	233	+ 6.5 %
0.25	237	+ 1.8 %

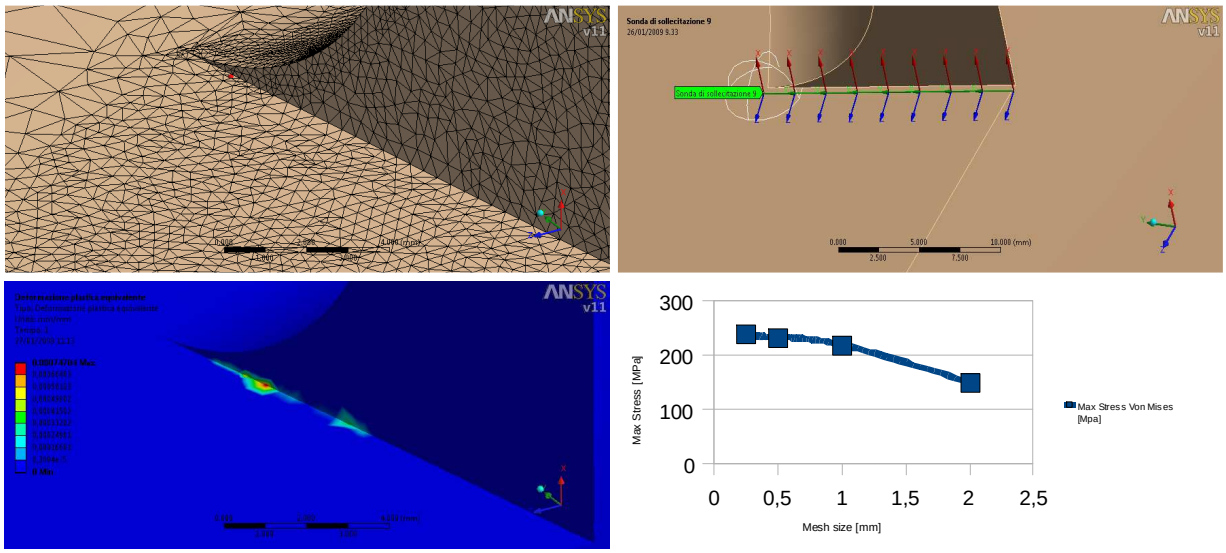

Figure 6. Mesh in the corner area (top left), control points in the corner area (top right), plastic deformations in the corner area (bottom left) and maximum equivalent stress as a function of elements size (elastic plastic material) (bottom right).

<u>Considerations on contact areas</u>

As better shown in the next paragraph, one of the critical area of the support is a fillet of about 1.6 mm radius that is at the base of the cylinder that houses the spherical bearing fitting (Figure 7).. The stress field in this fillet area can be not realistic if the load is applied directly on one or both the surfaces that house the spherical bearing as a portion of the load is applied on nodes that are very close to the fillet itself.

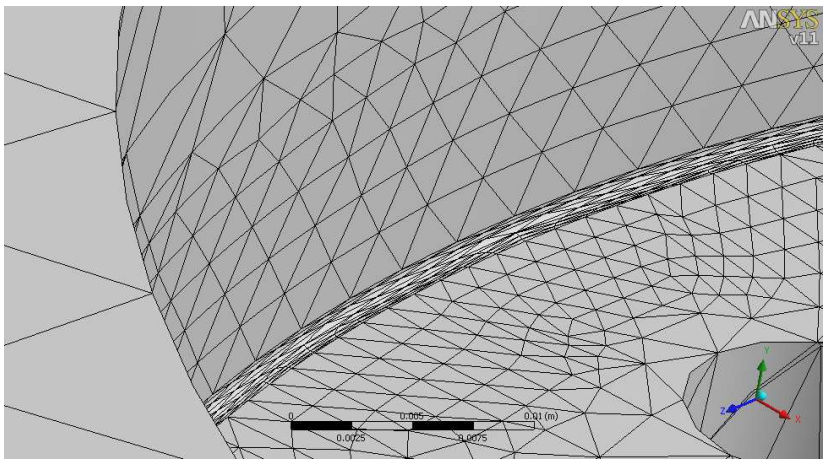

Figure 7. Detail of the *bearing fitting fillet* between the lower and the lateral surfaces supporting the spherical bearing.

It should also be noted that in the real support beam the load is transferred from the bearing fitting to the support partly by the friction due to the bolt (surfaces B1 and B2 in Figure 5) and partly by the contact on the cylindrical surfaces (surfaces A1 and A2 in Figure 5). For these reasons a set of *contact* surfaces (*contact* and *target* elements) were used in the model. These contacts simulate the bolted joint between the support and the bearing fitting and the cylindrical coupling of the same elements.

Final FEM model

The final models used for the original and modified support beam are shown in Figure 8. Table 4 summarises the main characteristics in terms of elements and nodes. As anticipated, the support is "clamped to the world", responding to the need of comparing stress fields in the critical area and fatigue safety factors for both the original and the filleted solution.

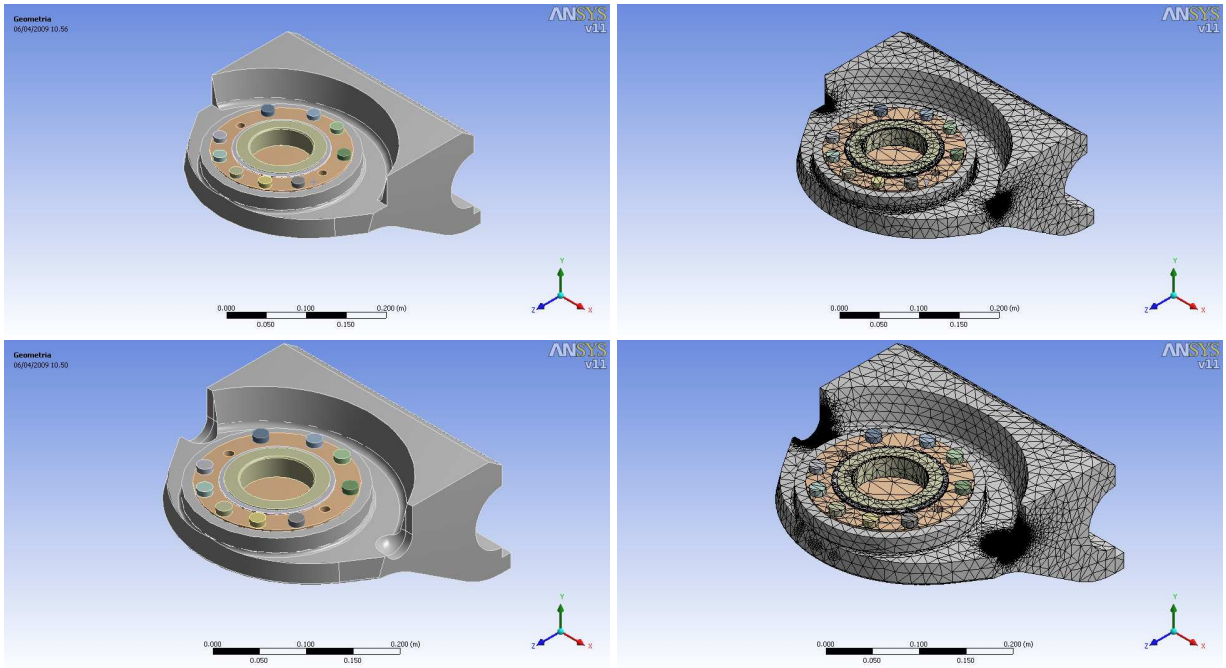

Figure 8. Geometry (left) and mesh (right) of the model of the current (top) and proposed (bottom) support beam

Table 4. FEM models mesh summary

Support model	Nodes	Elements	Contact pair
Original	361871	232490	23
With spherical fillet	569284	360754	23

DISCUSSION OF FEM MODEL RESULTS

The main results for the *static* load cases are listed in Table 5 and shown in Figure 9. Also from a quick lookup of the results it is evident that the original solution suffers from a very high stress concentration in the area of the sharp edge where cracks started to propagate and that the proposed modification greatly reduces the risk of fatigue damage. It also appears evident that there is *another critical area* in the support, i.e. the *bearing fitting fillet* at the base of the housing where the spherical bearing fitting is placed; in this zone the advantage offered by the spherical fillet of the sharp edge is negligible.

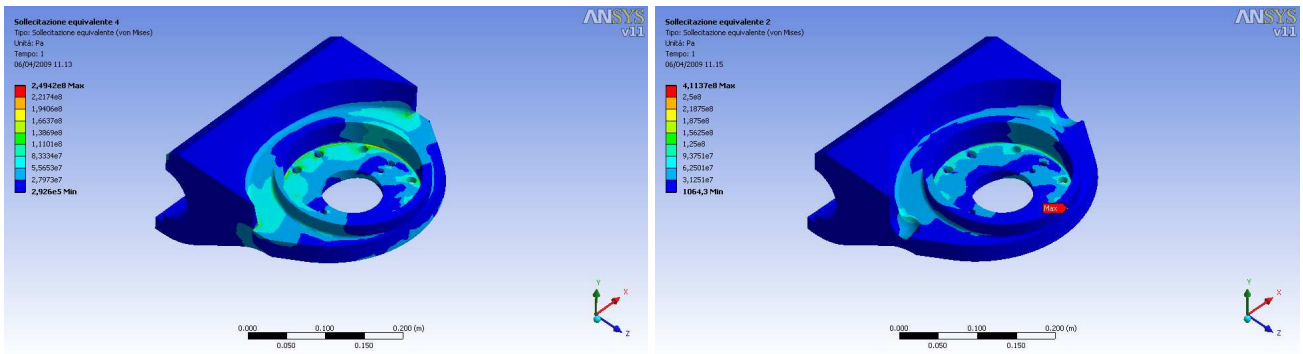

Figure 9. Stress field for load case S.3 of original (left) and filleted (right) support beam.

Table 5. Static load cases results summary

Load case	Original solution stress [MPa] and safety factor	Filleted solution stress [MPa] and safety factor
Effect on sharp edge		
S.1	204 (1.27)	97 (2.68)
S.2	155 (1.68)	80 (3.25)
S.3	220 (1.18)	139 (1.87)
Effect on bearing fitting fillet		
S.1	220 (1.18)	196 (1.32)
S.2	159 (1.63)	170 (1.53)
S.3	250 (1.04)	240 (1.08)

The main results for the *fatigue* load cases are listed in Table 6 and shown in Figure 10. For fatigue load cases the stress amplitude is evaluated as a non proportional combination of Von Mises stress with sign depending on the value of the maximum principal stress.

Although until now there were no evident failures in the area of the *bearing fitting fillet*, it should be highlighted that that area is not visible during normal maintenance operations (suspended carbody need to be lifted to gain access to the bearing area and the spherical bearing and its fitting system need in any case to be disassembled) and that ultrasonic monitoring of the component is also unfeasible due to the position and geometry.

Table 6. Fatigue load cases results summary

Load case	Original solution stress [MPa] and safety factor	Filleted solution stress [MPa] and safety factor
Effect on sharp edge		
F.1	129 (0.76)	46 (1.52)
F.2	26 (1.56)	13 (2.93)
F.3	40 (1.53)	20 (2.14)
F.4	41 (1.36)	10 (3.00)
Effect on bearing fitting fillet		
F.1	112 (0.87)	107 (0.88)
F.2	55 (1.16)	50 (1.20)
F.3	73 (1.00)	51 (1.15)
F.4	64 (1.10)	46 (1.30)

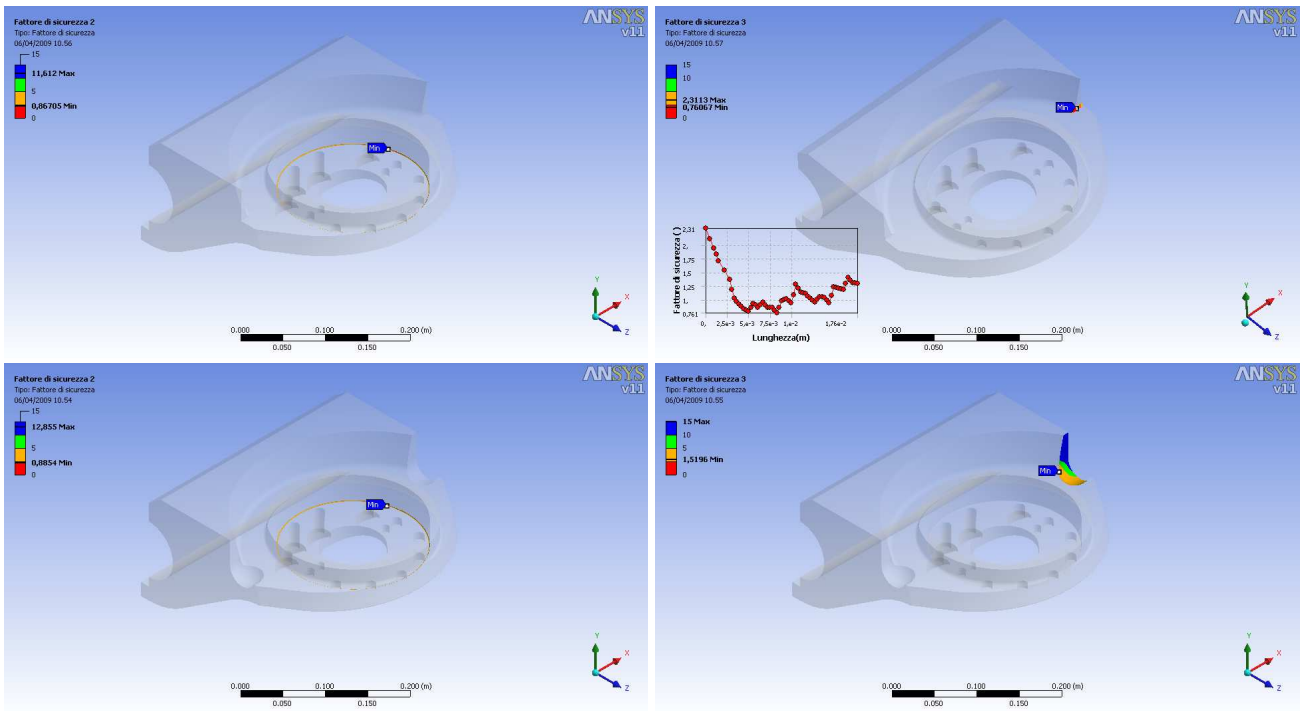

Figure 10. Safety factors for load case F.1 for current (top) and proposed (bottom) support beam

CONCLUSIONS

A non conventional FEM structural analysis of the support beam of a low floor tram housing a spherical bearing support was developed in order to investigate the failure of this components and to evaluate a possible modification/repair option. The model of the support resulted to be very accurate from the geometric and meshing point of view as well as including a particularly careful application of loads. This allowed to describe the stress field in the areas of interest with the greatest accuracy. The model allowed to confirm that the proposal made. i.e. the introduction of a spherical fillet in an original *sharp edge*, dramatically reduced the stress concentration around that point.

As a side effect, the model found also a second critical area, i.e. the *bearing fitting fillet*, that wouldn't be actually modified by the proposed repair and that potentially is as dangerous as the known one. The geometry of the spherical bearing, spherical bearing fitting and surrounding components makes any modification of the support in the fillet area very uneasy, so an increase in the fillet radius is not feasible.

The discovery of this second potentially dangerous point in the spherical bearing support should lead to the reconsideration of the opportunity of changing the current support beam with a different type. As welding over already welded areas is not in general a recommended practice, the opinion of the authors is that the best solution could probably be the use of a bolted steel support beam that is much less critical with a negligible impact on the weight of the whole vehicle. It is worth to remind that such a support beam is absolutely similar to that already mounted on a previous series of partially low floor trams.

Although the use of finite element models is well established in the railway industry since many decades, this work shows that material properties (including fatigue behaviour and plasticity), geometric local features and load applications peculiarities (including pre-stress, friction and contacts in general) are required to avoid serious consequences on safety and costs.

REFERENCES

[1] EN 12663:2000, *Railway applications - Structural requirements of railway vehicle bodies*, CEN, Brussels, 2000.